TECHNICAL SPECIFICATIONS

AU-RENE THEATRE

BROWARD CENTER

for the

PERFORMING ARTS

Fort Lauderdale, Florida

TABLE OF CONTENTS

GENERAL CONTACT INFORMATION 3
MAP & DIRECTIONS 4
TRUCK, BUS & VEHICLE PARKING 4
SITE PLAN 5
LOADING DOCK INFO 7
SEATING CHART 9
STAGE SPECIFICATIONS 10
ORCHESTRA PIT / STAGE THRUST INFORMATION 10
STAGE DIMENSIONS / GROUND PLAN 11
RIGGING SPECIFICATIONS/OBSTACLES 14
SOFTGOODS INVENTORY 14
FOH RIGGING POINTS 15
GRID IRON DATA 16
HANGING PLOT / LINE SCHEDULE 17
SOUND AND COMMUNICATIONS 19
LIGHTING INFORMATION 23
POWER DISTRIBUTION 23
GENIE LIFT 24
DIMENSIONAL INFORMATION 25
LIGHT PLOT 26
ORCHESTRA EQUIPMENT / CONCERT SHELL INFORMATION 35
BACKSTAGE MAP 37
DRESSING ROOMS 38
PRODUCTION OFFICES 39
WARDROBE / SUPPORT SPACES 41

Au-Rene Theatre

at the

Broward Center for the Performing Arts

201 Southwest 5th Avenue
Fort Lauderdale, FL 33312
Main Office (954) 522-5334 (M-F 8:30A-5:30P)
Main Fax (954) 468-2549
Box Office (954) 468-3338

PRODUCTION STAFF

Director of Production	Tim Lessig	(954) 468-2557	tlessig@browardcenter.org
Production Manager	Chris Jahn	(954) 765-5802	cjahn@browardcenter.org
Production Manager	Lucas Bonewits	(954) 468-3317	lbonewits@browardcenter.org
Production Supervisor	Diane DeChello	(954) 765-5819	ddechello@browardcenter.org
Technical Supervisor	Katie Byron	(954) 468-3319	kbyron@browardcenter.org
Production Coordinator	Chane Chinapen	(954) 414-6906	cchinapen@browardcenter.org
Production Coordinator	Jessica Mendoza	(954) 660-6376	jmendoza@browardcenter.org
Production Coordinator	Christina Baroniel	(954) 660-6377	cbaroniel@browardcenter.org
Production Coordinator	Jimmy Rodgers	(954) 660-6386	jrogers@browardcenter.org
Production Fax		(954) 468-3315	
Stage Door Security Desk		(954) 468-3323	

EVENT SERVICES STAFF

Vice President of Operations	Shelly Bradshaw	(954) 468-2696	sbradshaw@browardcenter.org
Director of Event Services	Pablo Urquilla	(954) 468-3313	purquilla@browardcenter.org
Event Services Manager	Kerry McCloskey	(954) 414-6905	kmccloskey@browardcenter.org
Event Services Coordinator	Brandy DeMil	(954) 660-6350	bdemil@browardcenter.org

STAGE LABOR - I.A.T.S.E. Local 500

The Broward Center for the Performing Arts employs members of I.A.T.S.E. Local 500 for all productions in the Au-Rene Theatre. Please contact Production Staff for labor rates and work rules.

Head Carpenter	Lou Falzarano	(954) 257-7293	louf_iatse@msn.com
Head Sound	Ahmed Lugo	(954) 478-8274	ahmedlugo@gmail.com
Head Electrician	Juan Zilveti ETCP	(954) 815-9340	juanzilveti@earthlink.net
Head Props	Sheila Walters	(954) 665-9631	sheilawalter77@yahoo.com
Head Wardrobe	Mary Soule	(954) 295-0977	soule2362@aol.com
Assistant Carpenter	Gary Kousek ETCP	(954) 604-3722	gary.1126@gmail.com
Assistant Sound	Dan Donato	(954) 478-8274	dan.c.donato@gmail.com
Assistant Electrician	Dudley Pinder	(954) 805-8609	stagedawg@gmail.com
Business Agent Local #500	Terry McKenzie	(954) 881-2353	termack500@gmail.com

ADDITIONAL CONTACTS INFORMATION

Vice President of Programming	Matt MacNeil	(954) 468-3312	mmcneil@browardcenter.org
Director of Programming	Jill Kratish	(954) 468-3295	jkratish@browardcenter.org
Director of Guest Services	David Dillon	(954) 468-3305	ddillon@browardcenter.org
Director of Food & Beverages	Vinny Venezia	(954) 468-3337	vvenezia@browardcenter.org
Admin. Mgr F&B – Merch	William Stoneberg	(954) 468-3336	wstoneberg@browardcenter.org

MAP & DIRECTIONS

The Broward Center is conveniently located in the Riverwalk Arts & Entertainment District in downtown Fort Lauderdale, equidistant between Dade and Palm Beach Counties and can be reached by several routes.

From Interstate-95:
Exit at Broward Boulevard, Go east.

From Florida Turnpike (southbound):
Exit at Sunrise Boulevard, Go East to South-bound I-95, exit Broward Boulevard, Go east.

From Florida Turnpike (northbound):
Exit at I-595, Go East to North-bound I-95, exit Broward Boulevard, Go east.

To Backstage Parking

South Security Gate:
From Broward Blvd., turn South onto SW 7th Ave. Turn left at West Las Olas Blvd. (the second light). Take an immediate left into the backstage lot security gate. If you have a key card, hold it up to the reader and the gate will open -OR- push the buzzer to contact guard.

North Gate (trucks and buses):
From Broward Blvd. turn south onto SW 5th Ave. Turn right at Second Street (Himmarshee St.) The gate entrance to the backstage lot is on your left. Push the buzzer to contact security.

To Parking Garage and Valet:

From Broward Blvd., turn South onto SW 5th Avenue. The Arts and Science Parking Garage is on the immediate right, or, proceed straight ahead, cross Second St. (Himmarshee St.) and continue to the top of the hill for valet service.

From Ft. Lauderdale International Airport

Take the "US1 / Federal Highway Northbound" exit out of the Airport. Travel North on US1 to SE 17th Street Causeway. Turn left (West) and go to SW 4th Avenue and turn right (North). SW 4th Avenue will become SW 7th Avenue at the bridge. Go over the bridge, turn right at West Las Olas Blvd. Take an immediate left into the backstage lot security gate, push the buzzer to contact guard. OR proceed to 2nd light, turn right and use either North Lot, Garage, or Valet as described above.

GPS Addresses

South Security Gate
641 West Las Olas Blvd.
Ft. Lauderdale, FL 33312

North Gate (Trucks & Buses)
582 SW 2nd Street
Ft. Lauderdale, FL 33312

Truck, Bus, & Vehicle Parking

Truck & Bus Parking on site is very limited. Please inquire with Production Staff prior to arrival. There is parking available directly backstage in the North & South lots and additional parking available in the Arts and Science parking garage located across the street from the theatre. Parking arrangements must be discussed with Production Staff prior to the event for necessary access information, passes, and badges.

Package Deliveries

For all deliveries, please use our main building address to the care of your production and the recipient.

Broward Center for the Performing Arts – Site Plan

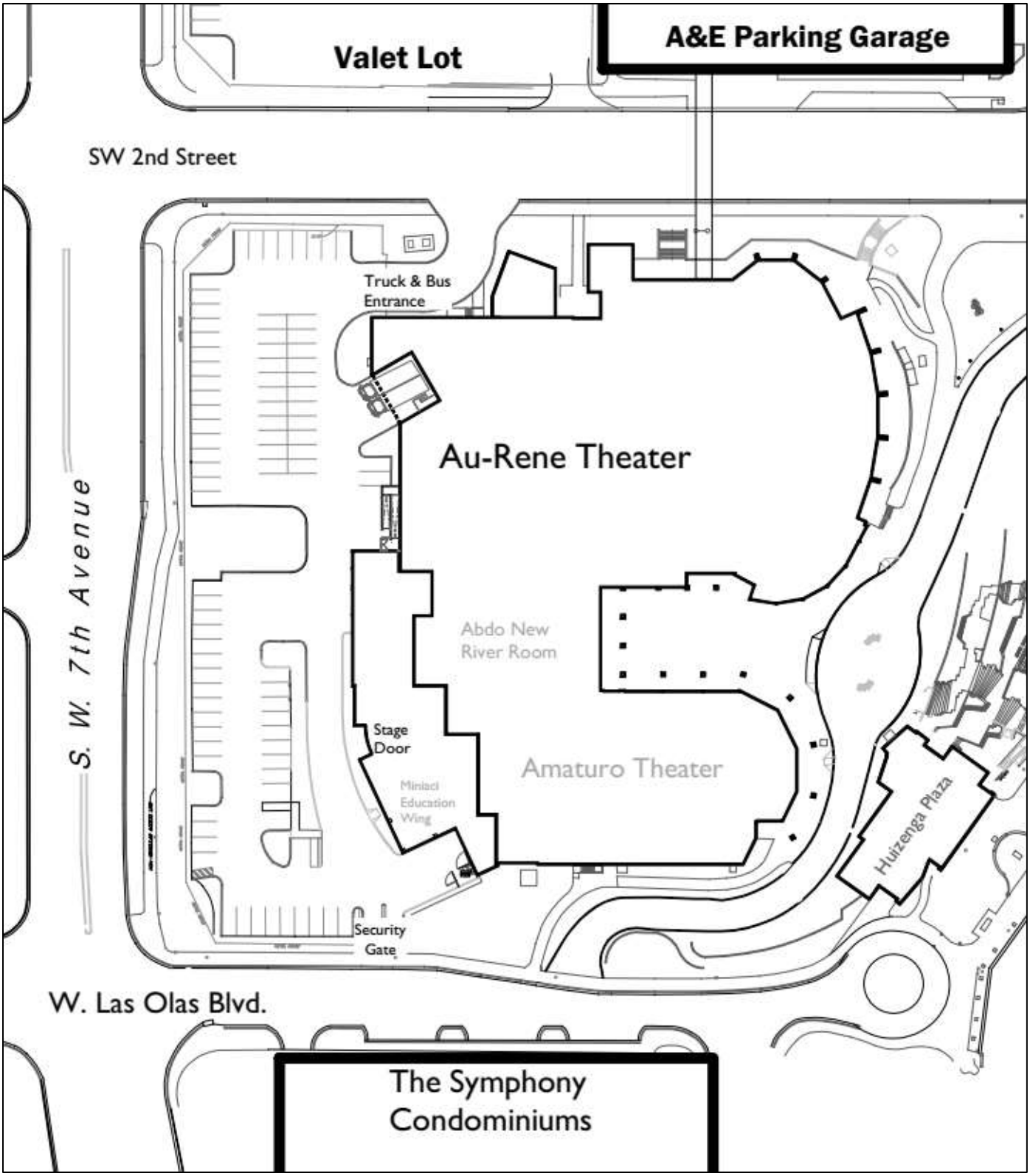

Broward Center for the Performing Arts – Aerial View

LOADING DOCK

The Au-Rene loading dock located on the Northwest corner of the building at S.W. 7th Ave. and SW 2nd St. There are two loading bays. Loading Dock is 4' high and doors are 8'w x 12'h with 1,185 square feet of receiving area. Doors from receiving area to the stage are 11'-9" x 14'-0". Bus & Truck shore power is available. Only one truck or bus can remain in the loading dock after load in. Two trucks and/or busses are allowed to park in the Northeast corner of the North Lot after load in. Please discuss Bus & Truck parking with Production during the advance process.

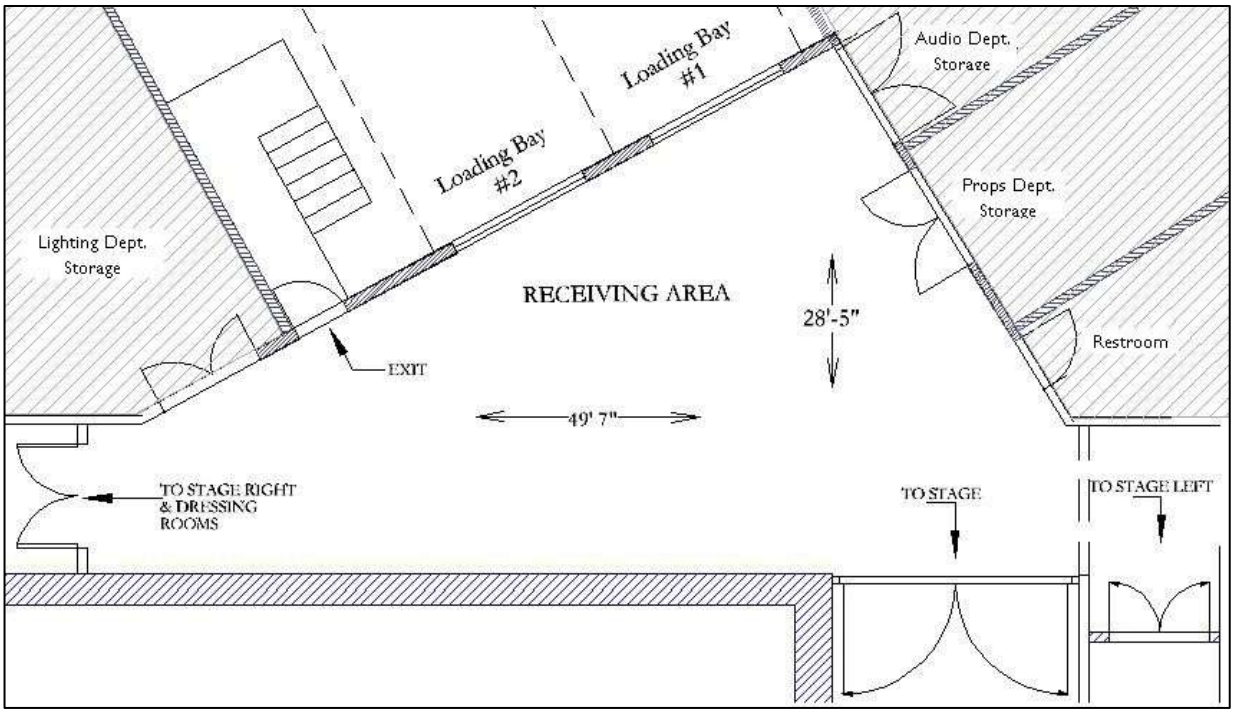

SEATING INFORMATION AND CAPACITY

The maximum seating capacity is **2658** seats

Orchestra Level Total – 1556 seats

Lower Orchestra Level (No Seat Holds)	Rows A – Z	820 seats
Upper Orchestra Level (No Seat Holds)	Rows AA – NN	674 seats
Orchestra Box Seats	Box A – H	30 seats
Standing Room	Behind Row NN	32 "seats"

Potential Tech Kills

Stairs directly into audience	Remove row B seats 2-4 & 1-3	4 seats lost
Half Pit Configuration	Remove Rows A – C	39 seats lost
Full Pit / Full Thrust Configuration	Remove Rows A – F	107 seats lost
Kings Rows Center / Sound Mix Position	Remove Center Rows Y – Z	24 seats lost
Kings Row Left	Remove House Left Row Y 1 – 27	12 seats lost
Kings Row Right	Remove House Right Row Y 2 – 28	12 seats lost

Mezzanine Level Total – 504 seats

Mezzanine Club Section	Row C – J	71 seats
Mezzanine Level	Rows A – K	409 seats
Mezzanine Box Seats	Box A, B, D, E	24 seats

Balcony Level Total – 630

Balcony Level	Rows A – N	614 seats
Balcony Box	Box A & C	16 seats

Au-Rene Seating Chart

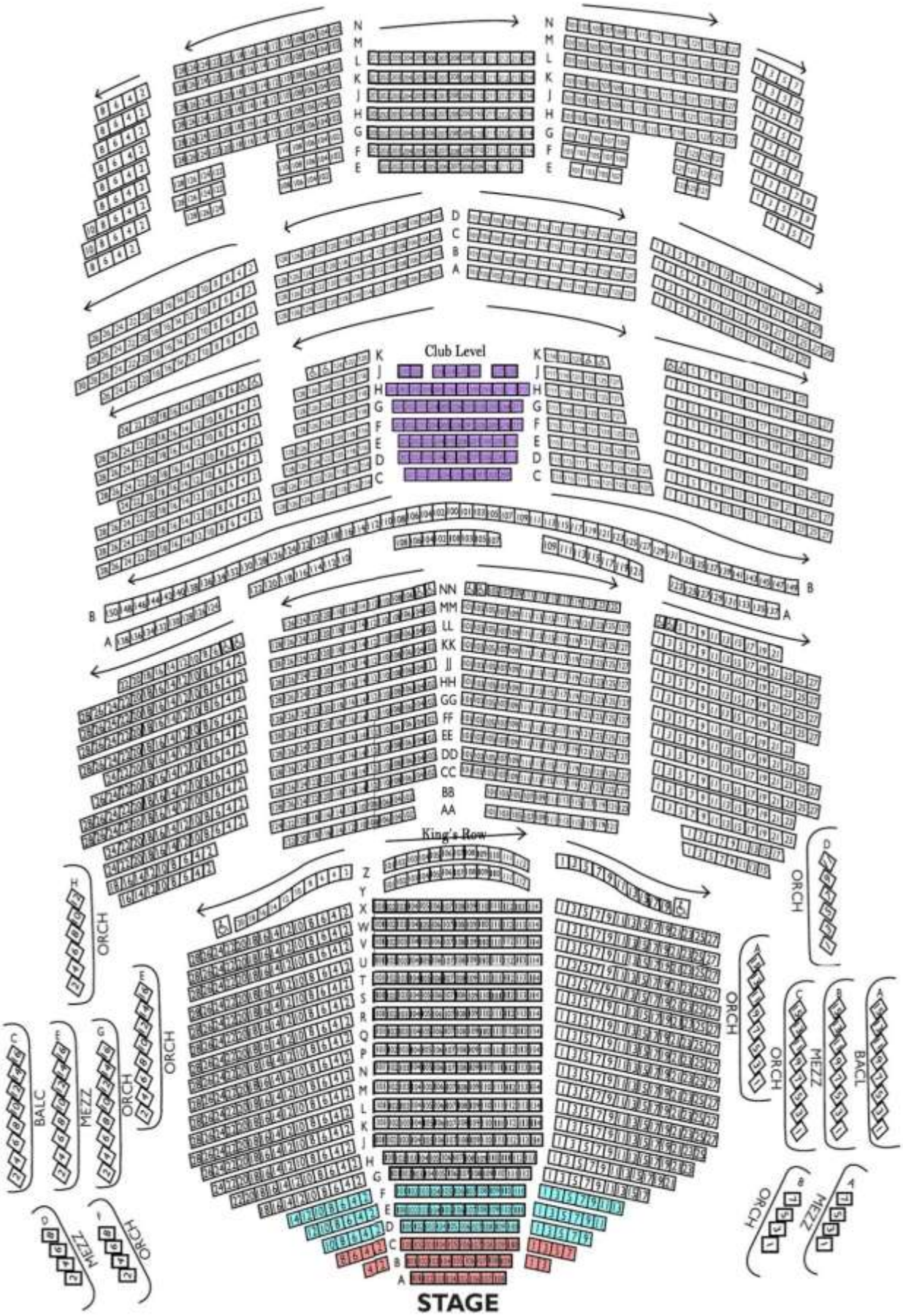

STAGE SPECIFICATIONS

STAGE FLOOR is a semi sprung floor with double layer tongue and groove plywood on aluminum sleepers over rubber blocks, and finished with black Stagelam®. The rubber blocks are surrounded by a steel channel which limits over-decompression. Any damage to floor incurred by a production must be restored at conclusion. Both Thrust configurations are curved; measurements given are long the centerline.

HEIGHT OF GRID	90'
HEIGHT OF PROSCENIUM	40'-4"
WIDTH OF PROSCENIUM	55'
HEIGHT OF GALLERIES	
Upper Loading Gallery	79' (Top reach 89'-10")
Upper Operating Gallery/Pin Rail SR	37' (Catwalk is 32'-7")
Pin Rail SL	55' (Catwalk is 50'-7")
Upstage Catwalk	50'
Floor Level Operating Rail SR	Stage Level
DEPTH OF STAGE (From Plaster Line)	50'
WIDTH OF STAGE	117'
Width of Stage - Center to SR	56'
Width of Stage - Center to SL	61'
Center Stage to Pin Rail SR	41'
Center Stage to Pin Rail SL	46'

ORCHESTRA PIT / STAGE THRUST

The Orchestra Pit is a Spira-lift in two sections. The pit can be configured as Half Thrust, Full Thrust, Full Seating, Full Pit, or Half Pit.

APRON	
From Plaster Line	2'-4"
From House Curtain	3'-10"
FULL THRUST	
From Plaster Line	21'
From House Curtain	22'-6"
HALF THRUST	
From Plaster Line	21'
From House Curtain	22'-6"
HEIGHT OF STAGE (Seating level to stage level)	3'-6"
FULL PIT OPENING (Stage edge to DS pit wall)	18'-9" D
Overall Dimensions (including pit under-hang)	25' x 52'
Approximate Capacity of Musicians	62 musicians
HALF PIT OPENING (Stage edge to DS pit wall)	10'-9" D
Overall Dimensions (including pit under-hang)	17'-52'
Approximate Capacity of Musicians	41 Musicians
HEIGHT OF PIT (Pit level to stage level)	9'
HEIGHT OF STAGE (Seating level to stage level)	3'-6"
PIT UNDER-HANG	6'

AU-RENE STAGE: FULL SEATING

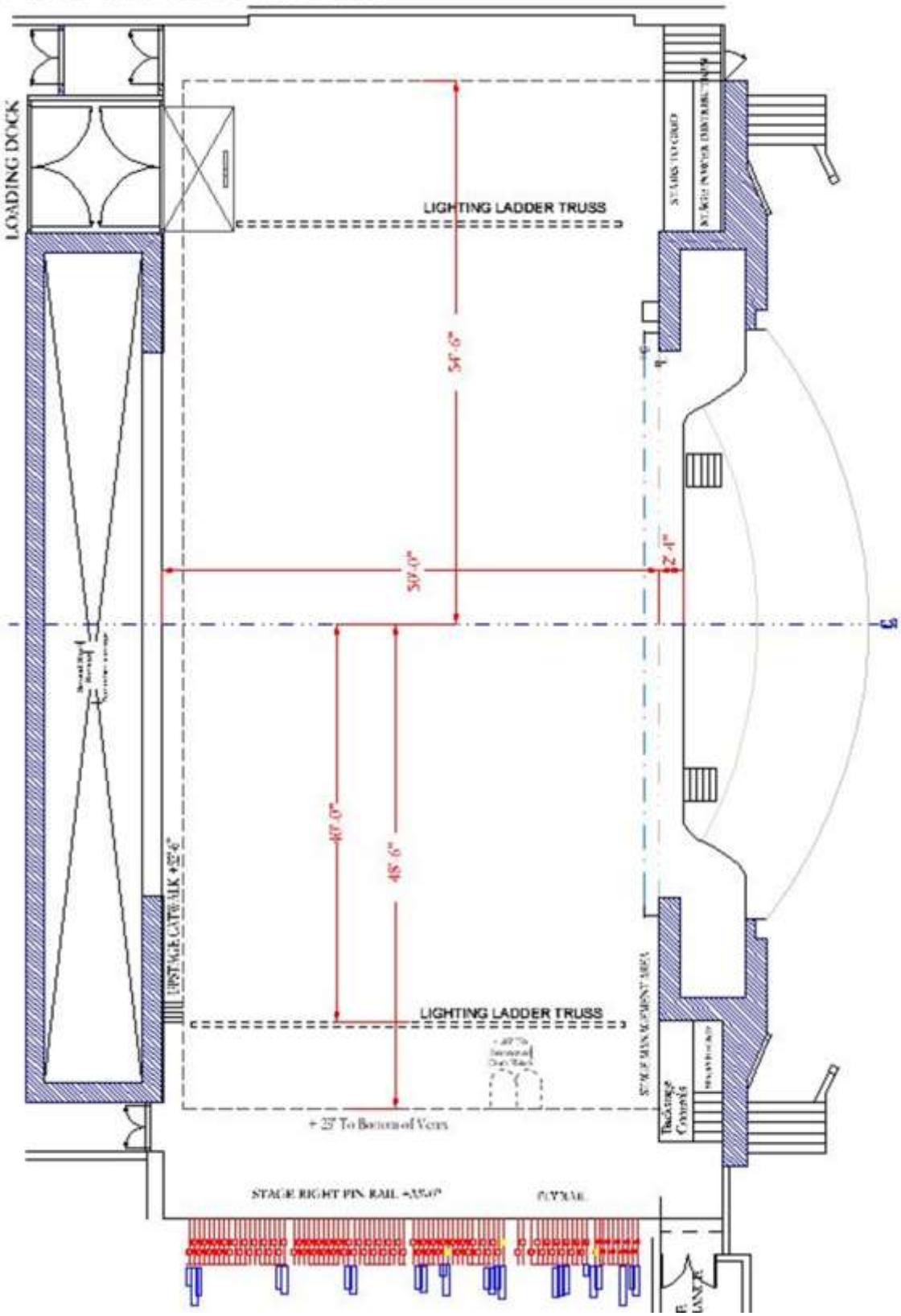

AU-RENE STAGE: FULL THRUST

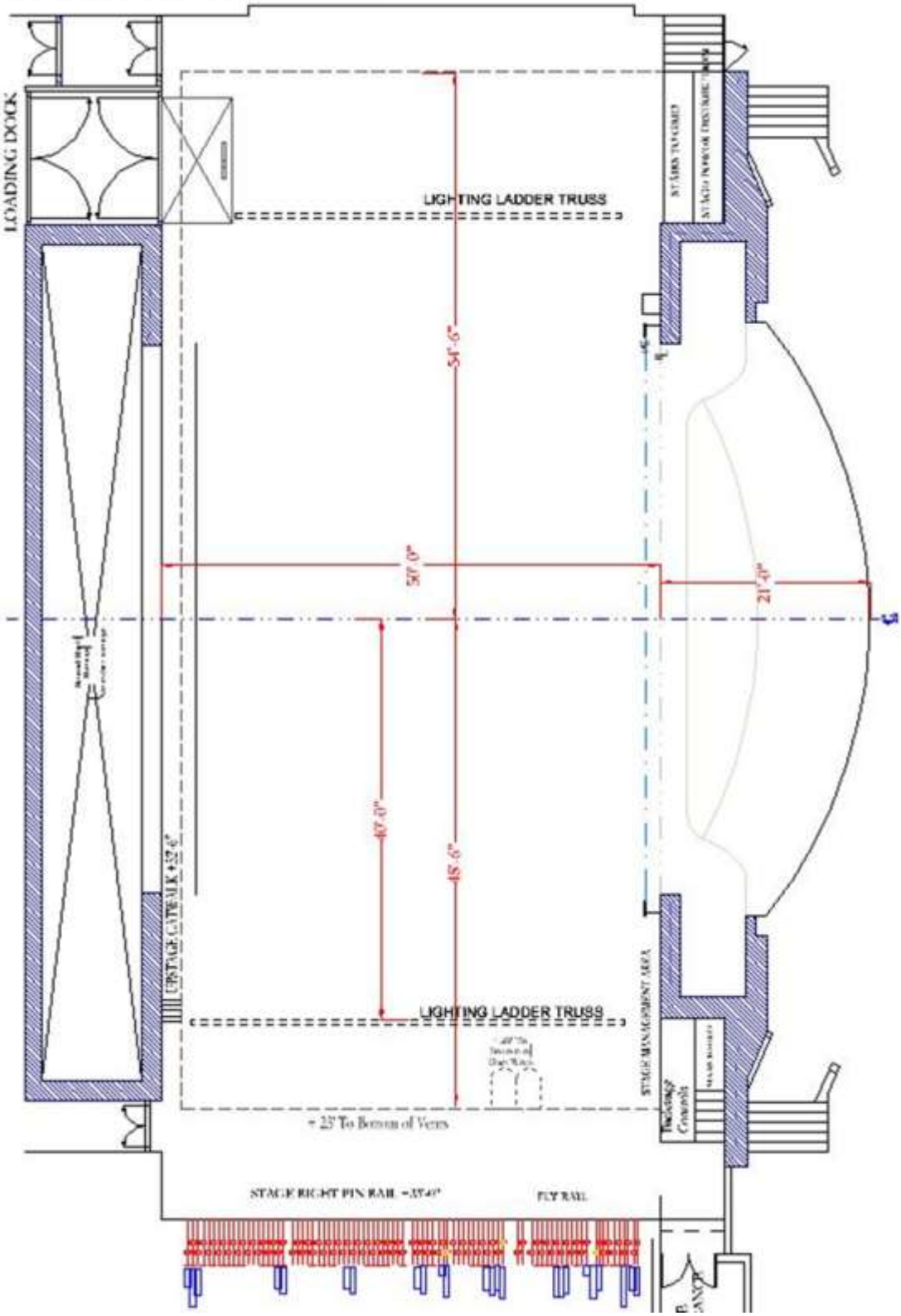

Au-Rene Section View

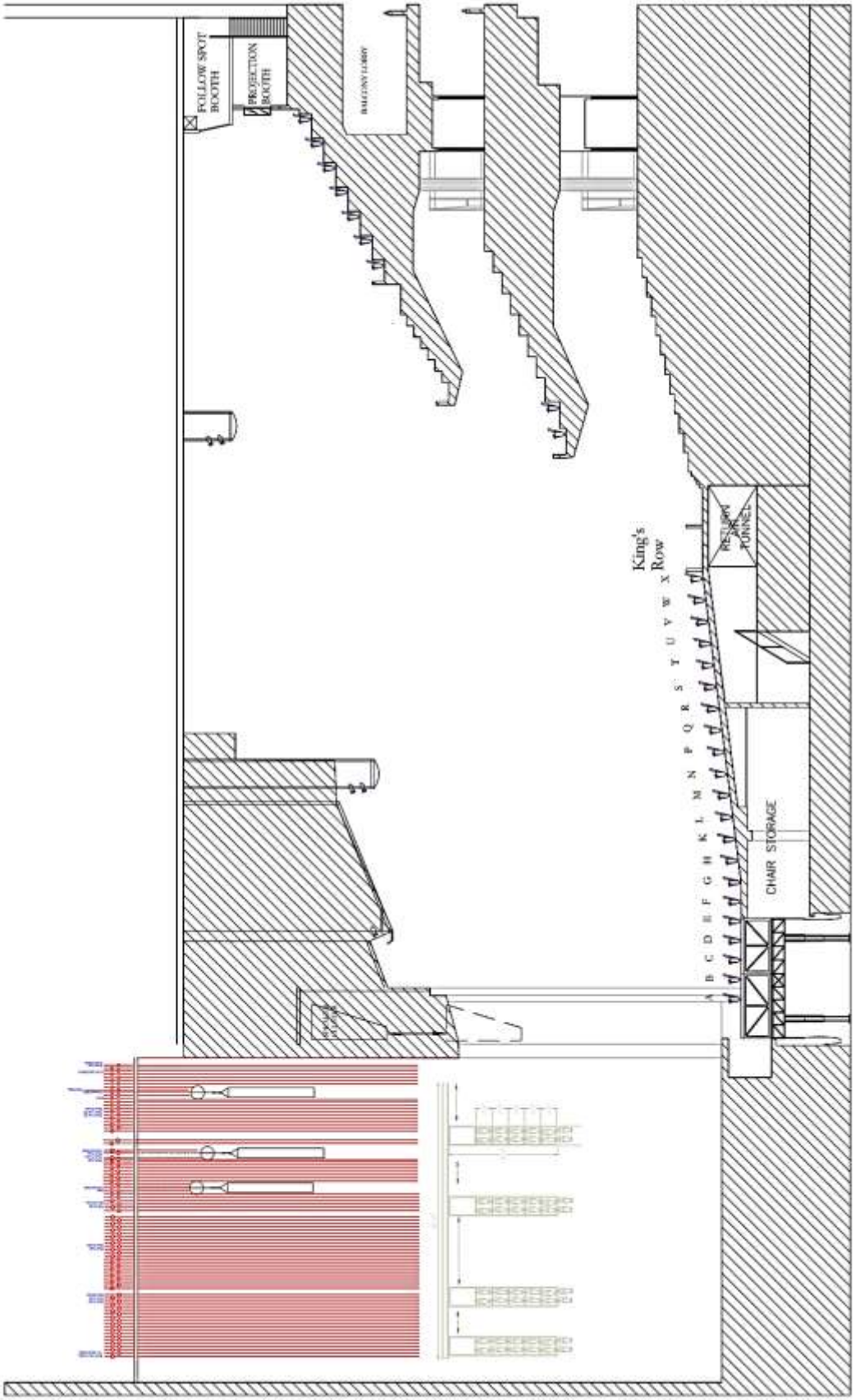

RIGGING SPECIFICATIONS

Counter weight system is a single purchase under-hung with 87 hand operated line sets and two operating positions available. One position is located on stage level and the second is located 33' above stage right deck. The grid is a Purlin Grid. Wells are located 5'-5", 16'5", 27'5", and 38'-5" L/R of center.

LINE SETS AVAILIBLE	86 (6" on center)
GRID HEIGHT	90'
TRAVEL DISTANCE	84'3" (From "pipe in" position)
MAX WEIGHT PER ARBOR	1,800 lbs
TOTAL WEIGHT AVAILIBLE	150,000 lbs
LENGTH OF BATTENS	63'
DIAMETER OF BATTENS	2"

OBSTACLES

Line set #1 has a hard portal header and line set #2 has a set of adjustable hard portal legs. Portal header and legs are permanent and cannot be removed. Use line set #3 as first available.

Orchestra Shell Ceilings

There are three permanent orchestra shell ceiling panels; the first is located between line sets #9 & #10. The second is located between line sets #24A & #25. And the third is located on line set #36. Line sets #9, 10, 24A, 25, and 37 have limited out trims (around 60') due to proximity of orchestra shell ceilings. Avoid using these line sets for working pieces if possible. See line schedule for more out trim information.

House Curtain

The Au-Rene house curtain is motorized and operated at a maximum of 180 feet per minute, minimum 40 feet per minute, two halves with a three foot overlap. It is located 6" upstage from smoke pocket. The house curtain is permanent and cannot be shifted to another pipe or removed.

SOFT GOODS INVENTORY

Description	Units	Height	Width
House Curtain	1	43'	60'
Borders	1	44'	70'
Borders	6	16'	62'
Legs	4	43'	16'
Legs	8	43'	12'
Tabs	10	43'	6'
Split Black Drape	1	43'	62'
White Filled Scrim Cyclorama	1	38'	62'
Translucent Cyclorama	1	40'	62'
Black Sharkstooth Scrim	1	38'	62'

RIGGING POINTS

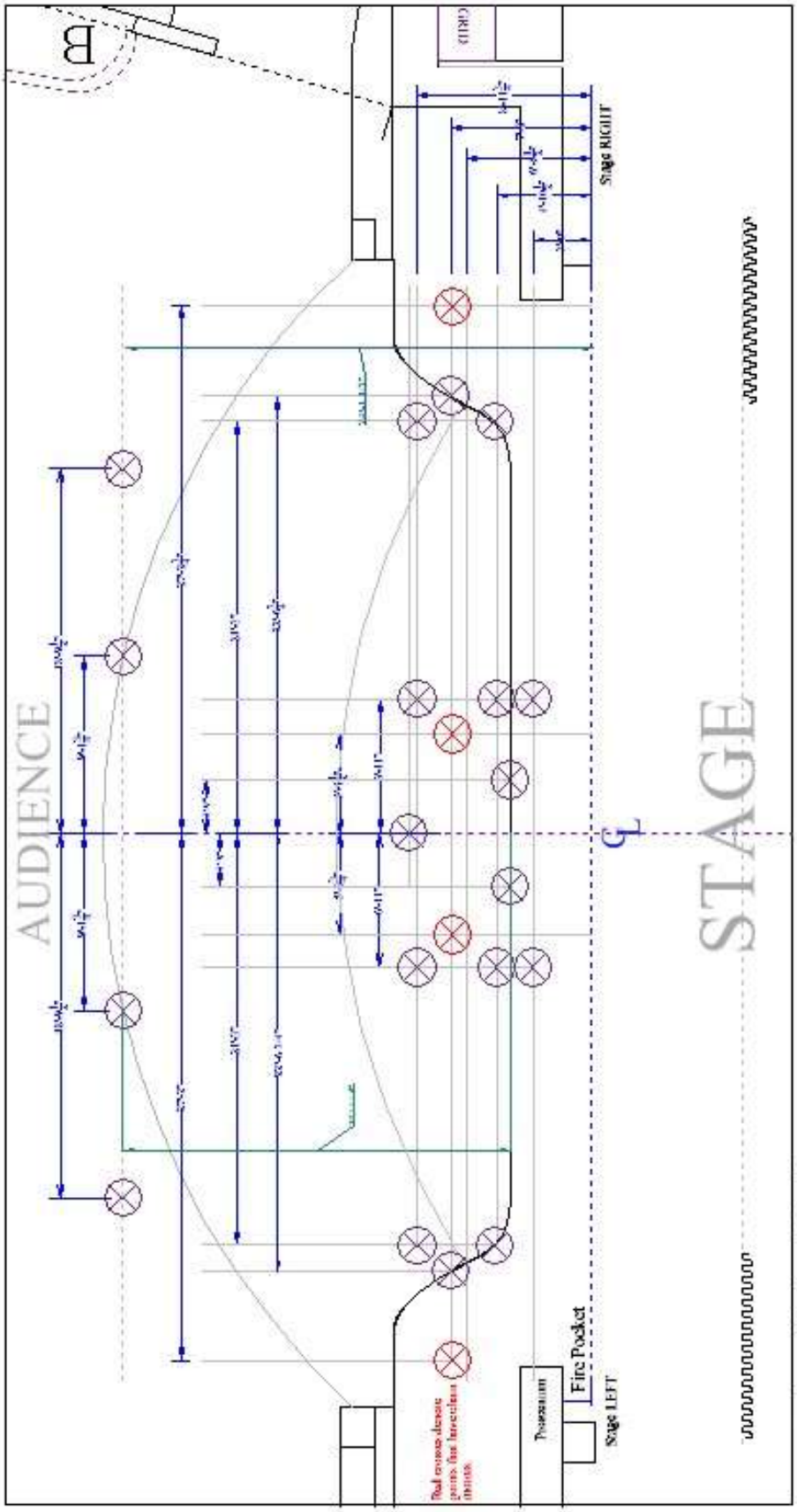

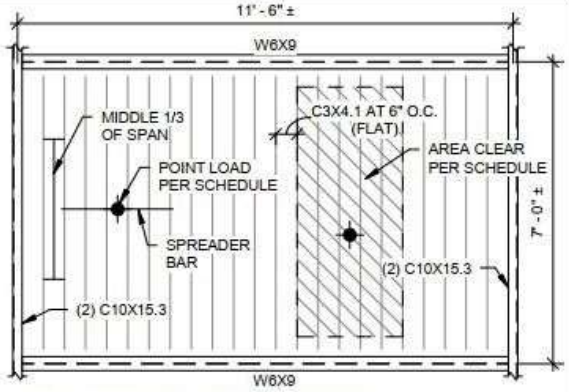

1 POINT LOAD AT MIDDLE 1/3 OF SPAN
3/8" = 1'-0"

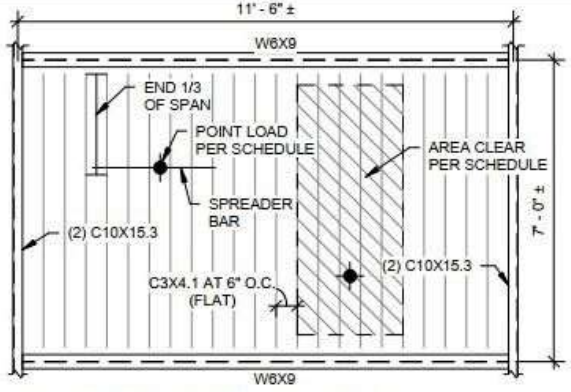

2 POINT LOAD AT END 1/3 OF SPAN
3/8" = 1'-0"

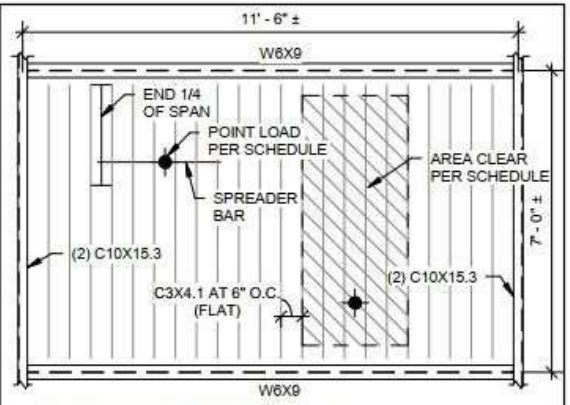

3 POINT LOAD AT END 1/4 OF SPAN
3/8" = 1'-0"

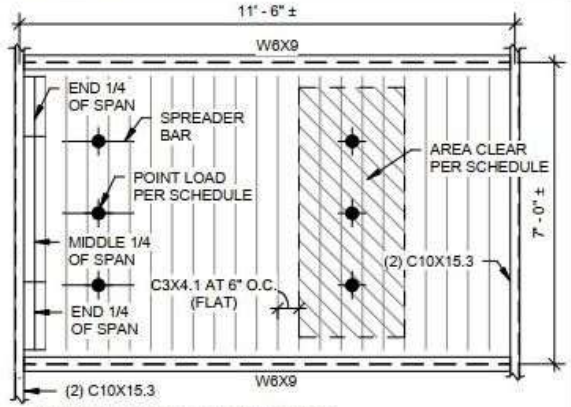

4 3 POINT LOADS AT 1/4 POINTS
3/8" = 1'-0"

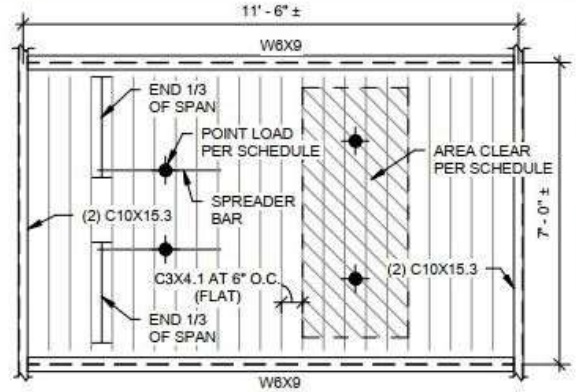

5 2 POINT LOADS AT 1/3 POINTS
3/8" = 1'-0"

Point Load Table

	Max Load (#)		Area Clear (ft^2)		
Spreader Length	24"	48"	24"	48"	Description
Configuration 1/S-02	1200	2400	16	32	Point Load Middle 2'-4" (mid span)
Configuration 2/S-02	1300	2600	17.5	35	Point Load End 2'-4" (1/3 span)
Configuration 3/S-02	1600	3200	23.5	43	Point Load End 1'-8" (1/4 span)
Configuration 4/S-02	3 @ 600	3 @ 1200	24	48	3 Point Loads at 1/4 Points
Configuration 5/S-02	2 @ 800	2 @ 1600	22	44	2 Point Loads at 1/3 Points

NOTE:
1. REDUCE MAX CAPACITY BY 20% FOR MOTOR OPERATED LOADS.
2. LOAD WHICH EXCEED THIS TABLE MUST BE VERIFIED BY AN ENGINEER.
3. TOTAL GRID IRON LOADING NOT TO EXCEED 75 PSF.

6 POINT LOAD SCHEDULE
3/8" = 1'-0"

REVISION:

SUPPLEMENT TO DRAWING No.:

DATE: 04/15/19
DESIGN: MTO
CHECK: MGB

PROJECT: BCPA TYPICAL GRID IRON LOADING

TLC JOB No.:

SCALE: 3/8" = 1'-0"

SKETCH No.: S-02

TLC ENGINEERING SOLUTIONS
THINK. LISTEN. CREATE.
©copyright 2019
874 Dixon Blvd.
Cocoa, FL 32922
P 321.636.0274
www.tlc-engineers.com
COA 15

AU RENE THEATER LINE SCHEDULE

LINE #	POSITION	House Hang	Show Hang	Weight
	0'0"	Fire Curtain		
	0'5"	House Curtain		
1	1'2"	Adjustable Height Soft Portal Header	*Permanent Header*	
2	1'7"	Adjustable Width Hard Portal Legs	*Permanent Hard Legs*	
3	2'0"			
4	2'6"			
5	3'0"			
6	3'6"			
7	4'0"			
8	4'6"			
9	4'11"	Travel limited to 62' 10"		
	5' 2"	Orchestra Shell: bottom trim 62'-10"	*Permanent Orchestra Shell*	
10	5'4"	Travel limited to 62' 10"		
11	6'3"			
12	6'9"			
13	7'4"			
14	7'9"			
15	8'3"	House Black Border		
16	8'9"	House Black Leg SR		
17	9'3"	House Black Leg SL		
18	9'9"			
19	10'3"			
20	10'9"			
21	11'3"			
22	11'10"			
23	12'8"			
24	13'2"			
24A	14'3"	Travel Limited to 61' 4"		
	14' 6"	Orchestra Shell: Bottom Trim 61'-4"	*Permanent Orchestra Shell*	
25	14'8"	Travel Limited to 61' 4"		
26	15'4"			
27	15'9"	House Black Border		
28	16'0"	House Black Legs		
29	16'6"			
30	17'0"			
31	17'6"			
32	18'0"			
33	18'6"			
34	19'0"			
35	19'6"			
36	20'0"	Orchestra Shell: Bottom Trim 60' 9"	*Permanent Orchestra Shell*	
37	20'6"	Travel Limited to 60' 9"		
38	21'0"			
39	21'6"			
40	22'0"			
41	22'6"	House Black Border		
42	23'0"	House Black Legs		
43	23'6"			

LINE#	POSITION	House Hang	Show Hang	Weight
44	24'6"			
45	25'0"			
46	25'6"			
47	26'0"			
48	26'6"			
49	27'0"			
50	27'6"			
51	28'0"			
52	28'6"			
53	29'0"			
54	29'6"	House Black Border		
55	30'0"	House Black Legs		
56	30'6"			
57	31'0"			
58	31'6"			
59	32'0"			
60	32'6"	House Blackout Drop		
61	33'0"			
62	33'6"			
63	34'0"			
64	34'6"			
65	35'0"			
66	35'6"			
67	36'6"	House Black Border		
68	37'0"	House Black Legs		
69	37'6"	House Black Scrim		
70	38'0"			
71	38'6"			
72	39'0"			
73	39'6"			
74	40'0"			
75	40'6"			
76	41'0"			
77	41'6"			
78	42'0"			
79	42'6"			
80	43'0"			
81	43'6"			
82	44'0"			
83	44'6"			
84	45'0"			
85	45'6"	House White Cyc (filled scrim)		
86	46'0"	House Black Out Drop		

SOUND AND COMMUNICATIONS

SPEAKER CONFIGURATION

The Au-Rene Theatre has a stereo line array system, flown flanking the proscenium opening to cover the Orchestra and Mezzanine levels with a center sub array. Delay arrays provide coverage for the Upper Balcony and the Under Balcony Fills consistent of ceiling mounted loudspeakers provide fill for seating located under the Mezzanine and Balcony overhangs. The side boxes have dedicated speakers aligned in three delay zones to improve intelligibility to these areas when the house arrays are flown out and touring arrays are utilized. The front fills service the first few rows of seating in the lower orchestra and are housed in a continuous cavity along the front of the stage.

Main Arrays

The primary speaker system consists of (2) Meyers Line Array of eleven (11) MICA speakers, flown on either side of the proscenium opening.

Sub Arrays

The Sub-woofer center array consisting of (6) Meyer M3D cardioid pattern sub woofers.

Delay Arrays

The Delay Arrays consist of two (2) Meyers Line Array Clusters of five (5) MICA speakers.

Under-Balcony Fill

The mezzanine level under balcony fills consist of twelve (12) d & b Audiotechnik E8. The Orchestra level under balcony fills consist of four (4) E12-D speakers powered by three (3) d & b Audiotechnik D12 amplifiers.

Side Box Fills

The fills for the side boxes consist of (18) E6 speakers powered by (3) d & b Audiotechnik D-6 amplifiers.

Front Fills

The front fills consist of EAE UB12Si speakers powered by (3) d & b Audiotechnik D-6 amplifiers.

Patching

All systems are available for individual discrete patching at mix positions as well as DSL and DSR patch points.

Audio Power

Audio power for the Au-Rene Theatre is provided through K-13 transformer delivering clean isolated power to all audio and video locations throughout the theatre. The following locations are available company tie ins:

100 amp 3 phase switch at DSL and DSR
(2) 20 AMP receptacles available DSR, DSL, USL, USR

SOUND MIXING POSITION

There are three mixing positions available. You must discuss all seat holds for mixing positions with Production or Event Staff prior to tickets going on sale.

SOUND BOOTH

Located in the rear of the orchestra level approximately 140' from the stage. This position is in a sound booth under a balcony that has a window that can open and is approximately 8'd x 9'w. The booth is located behind rows NN, seats 101-127. Cable run to the booth is approximately 300'

ALT MIX – IN FRONT OF SOUND BOOTH

Located in rows MM & NN, seats 101 to 127 in the rear orchestra level approximately 135' from the stage and is 6'-6" d and up to 22' w. Two rows of fixed theatre seating must be removed to use this position and may add additional labor charges. Cable run is 300'

KING'S ROW

This is the preferred position located in center of the orchestra level rows Y & Z, seats 101-114; approximately 75' from the stage. This position is 24' w x 7'-8" d, with a wall in front and back that is 2'4" high. Two rows of portable seating, approximately 24 seats, must be removed to use this position; discuss with Production of Event Staff prior to tickets going on sale. Cable run is 250'.

FRONT OF HOUSE CONSOLE

Digidesign VENUE Profile System 9935-55498-02 (24/8)

SOURCE GEAR

(1) Yamaha CDX-550 CD Player

MONITORS & MICROPHONE INVENTORY

Please note the following monitor and microphone package is shared with other venues at the Broward Center and may not be available for your event unless prior arrangements have been made with the Production Staff.

MONITOR CONSOLE:

1 Yamaha PM5D-RH

MONITOR SPEAKERS:

2 Shure in-ear monitors PSM700 w/ E3 SHU P7TRE3
10 Powered wedge speakers Meyers UM-100P
2 Stage monitors Meyers USM-100P
4 Side Fill speakers Meyers UPQ-1P
4 Powered subwoofer – dual 10" Meyers UMS-1P
2 EV 1502 ER
6 JBL MRX 512M
5 EAW VM12
4 Galaxy hot spots
7 Anchor AN 1001 X
1 Anchor AN 1000 self-powered
1 Galaxy Audio Hot Spot PAIII self-powered hot spot

Portable Microphone Splitter:

1 58 pair Whirlwind splitter with 1 direct out and 2 ISO splits
1 300' 58 pair mass connector
4 16 pair mic input sub snaked in lengths of 100' 75' 50' and 25'
1 16 pair 75' output sub snake

MICROPHONES

Wired Microphones:

Manufacturer/Model	Quantity
Shure KSM 9	7
Shure KSM 141	6
Shure KSM 32	6
Shure Beta SM57	12
Shure SM58	7
Shure Beta SM58	6
Shure SM81	4
Shure SM87A	5
Shure Beta 98A	8
Shure Beta 91	2
Shure Beta 52	2
Shure Beta 181S	4
Shure Beta 56	6
Shure Beta 57A	9
Shure WA310	12
AKG C414 XLII/ST	2
AKG C214	2
AKG C535	2
Countryman ISOMAX 2	12
Countryman ISOMAX 2H	12
Countryman M4HP5RF24EB	6

Manufacturer/Model	Quantity
Sennheiser ME 66	7
Sennheiser MD421U	3
Sennheiser MD441	1
Sennheiser E609	4
B & K 4011	2
Earthworks PM 40	2
Electro Voice RE320	2
Electro Voice RE20	4
Electro Voice DS35	4
Whirlwhind PB 12	2
Beyer M160	4
Panasonic Ramsa S1	1
Audio Tech AT857QMa	3
Audio Tech AT857QMLa	1
Crown PCC 160	8
Crown PZM LP6	3
Crown PZM 6RB	3
Crown GLM 200	2

WIRLESS MICROPHONES:

There are six (6) channels of Shure UR4D Diversity Receivers

- 6 Shure Beta 58 handhald transmitters
- 8 KSM9 alternate cartridge for handheld transmitters
- 6 URI Bodypack transmitters
- 3 Shure MKE 2 gold lavalier microphones
- 3 Countryman E6 earset microphones

There are 4 channels of SHURE U4D Receivers, Series J5, frequency agile 578-638 MHz
The following microphones are available for these receivers:

- 4 Shure U2 BETA 87A handheld transmitters
- 4 Shure U1 bodypack transmitters w/ Countryman B-3 mics

There are 8 channels of SHURE SLX receivers, Series H5, frequency agile 518-548 MHz
The following microphones are available for these receivers:

- 2 Shure BETA SM87 handheld transmitters
- 8 Shure SLX bodypack transmitters w/ Countryman B-3 mics

There are 8 channels of Shure SLX receivers, Series L4, frequency agile 638-662 MHz

- 2 Shure BETA SM87
- 8 Shure SLX Beltpacks w/ Countryman B-3 mics

DIRECT INPUT BOXES:

10	Countryman FET 85	Passive DI
6	Radial Engineering JDI MKIII	Passive DI
4	Radial Engineering JPC	PC DI
2	Whirlwind PCDI	PC DI

BACKSTAGE COMMUNICATIONS

The Au-Rene Theatre is equipped with a ClearCom 4 Channel intercom system; stations are located in the control booths, spot booth, and in the wing (including fly rail)

- 1 PS-704 four channel power supply (supports up to 40 packs)
- 1 RM-704 four channel remote rack station
- 8 RS-601 wired beltpack (single channel)
- 4 RS-602 wired beltpack (two channels)
- 10 CC-26K-X4 single muff headsets (5 pin)
- 2 WBS-680/A2 wireless intercom transceivers
- 8 WTR-670 wireless beltpack

LIGHTING INFORMATION

CONTROL

1 ETC EOS Console 8000, 2 monitors
1 ETC Ion Console 1000, Universal Fader Wing 2 x 20, 2 monitors

FRONT OF HOUSE TRANSFER PANEL

Located DSL over Company switch – DMX in transfer available through board

POWER DISTRIBUTION

6 400 Amp 3-Phase disconnects DSL (2400 Amps total divided into 6 disconnects)
1 400 Amp 3-Phase disconnect USL
2 100 Amp 3-phase disconnects: (1)-USR, (1)-USL
1 400 Amp 3-phase Shore Power Panel (Lighting Storage/Loading Dock)
16 20 Amp circuits located on each corner of the stage
2 30 Amp circuits available on mezzanine

FOLLOWSPOTS

4 3k Lycian Followspots located in spot booth 158' from stage at a 25 deg angle

INSTRUMENT INVENTORY

This equipment is stored on racks in the Lighting Storage room and is available for use as needed.

10 10 deg ETC Source 4 750W HPL
48 19 deg ETC Source 4 750W HPL
72 26 deg ETC Source 4 750W HPL
48 36 deg ETC Source 4 750W HPL
12 50 deg ETC Source 4 750W HPL
4 6" Fresnels 750W BTN
24 8" Fresnels 1K BVV
120 Par 64 1K M (available spare lamps: 45 VN; 76 N; 16 M; 52 W)
25 Par 56 Strips: (12 cell/3 circuit) 300W Par 56 Med
6 Altman Far Cyc (3 cell/3 circuit) 1k FFT
7 T3 Ground Row – (6 cell/3 circuit) 1K FCM

HARDWARE INVENTORY

This equipment is stored in the Lighting Storage room and is available for use as needed.

50 City Theatrical Stacker Top Hats 6'-1/4"
20 Size "A" Gobo Holders
20 Size "B" Gobo Holders
12 Iris Slot Gobo Holders size "B"
100 Gel Frames
100 S4 Cardboard Main Frames 6'-1/4"
10 5 deg S4 Cardboard Mainframe – 14"
20 10 deg S4 Cardboard Mainframe – 12"
511 Safety Cables
20 Drop-in Iris Units
12 Gel Extenders 6-1/4"
1 Look Solutions UNIQUE II Hazer
4 Par Lens Removal Tool American DJ
10 18' Booms with bases

FRONT OF HOUSE INVENTORY

These units are hung in the existing FOH lighting plot and are not included in the instrument inventory.

FAR CATWALK

36 ETC Source 4 5 deg 750W HPL (hung/circuited 1-1)

NEAR CATWALK

8 ETC Source 4 5 deg 750W HPL (4 hung/2 circuited 1-1, 4 not circuited)
24 ETC 10 deg 750W HPL (24 hung, 10 circuited 1-1, 14 not circuited)
36 ETC Source Four 19 deg 750W HPL (hung, circuited 1-1)

MEZZANINE RAIL

7 ETC Source 4 10 degree 750W HPL (hung/circuited 1-1)
14 ETC Source 4 19 degrees 750W HPL (hung/circuited 1-1)

BOX BOOM SL

20 ETC Source 4 19 deg 750W HPL (hung/circuited 2-1)
1 ETC Source 4 5 deg 750W HPL (spare for logo presentation)
10 ETC Source 4 10 deg lenses (spare)

BOX BOOM SR

20 ETC Source 4 19 deg 750W HPL (hung/circuited 2-1)
6 ETC Source 4 10 deg 750W HPL

APRON TORMS

4 ETC Source 4 19 deg 750W HPL (hung/circuited 2-1)
14 ETC Source 4 36 deg 750W HPL (hung/circuited 1-1)

ONSTAGE SIDE LIGHT LADDERS

SL/SR Ladders – located 40' from CL. 4 adjustable ladders per side, instruments distributed equally to each.

32 ETC Source Four 26 deg 750W HPL (hung/circuited 2-1)
32 ETC Source Four 36 deg 750W HPL (hung/circuited 2-1)

GENIE LIFT

1 36' Genie AWP 36 lift (battery)

DIMENSIONAL INFORMATION

Curtail Line to Mezz Rail	92' at 15 deg angle 90' from stage
Curtain Line to Spot Booth	158' at 25 deg angle
Curtain Line to Near Catwalk	65' at 55 deg angle 40'-9" from stage Height 59'-6"
Curtain Line to Far Catwalk	118'-7" at 40 deg angle 92'-6" from stage Height 78'-4"
Curtain Line to "King's Row" Center	73'
Curtain Line to Lighting Booth	110'
Curtain Line to Box Booms	66'-3" at 35 deg angle from top pipe 55' from stage – Height 46'-3"
Curtain Line to Box Booms Torm	55'-4" at 35 deg angle from top of pipe 20'-10" from stage – Height 41'-8"

AU-RENE LIGHTING PLOT

An AutoCAD version of the complete plot is available upon request

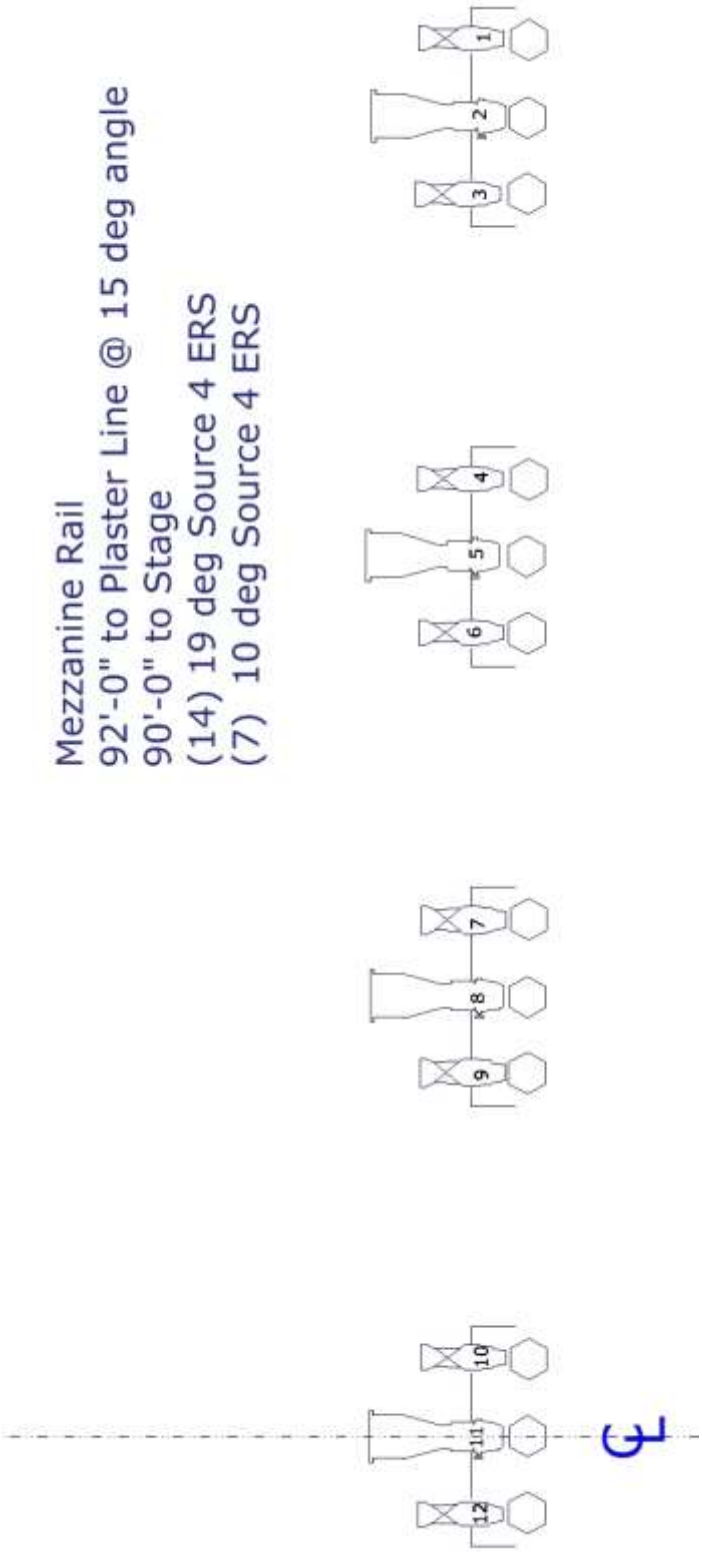

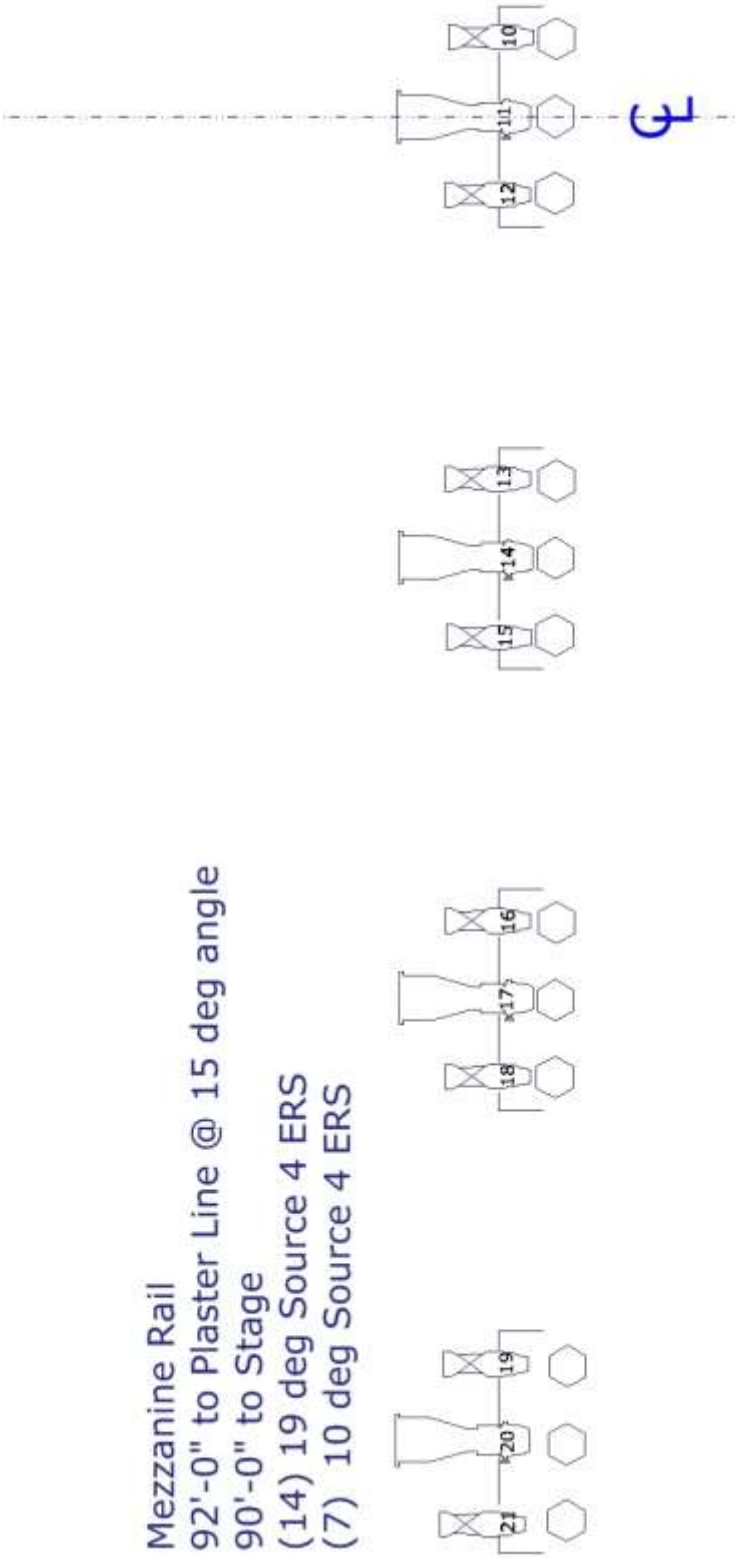
Mezzanine Rail
92'-0" to Plaster Line @ 15 deg angle
90'-0" to Stage
(14) 19 deg Source 4 ERS
(7) 10 deg Source 4 ERS
10
11
12
13
14
15
16
17
18
19
20
21
℄

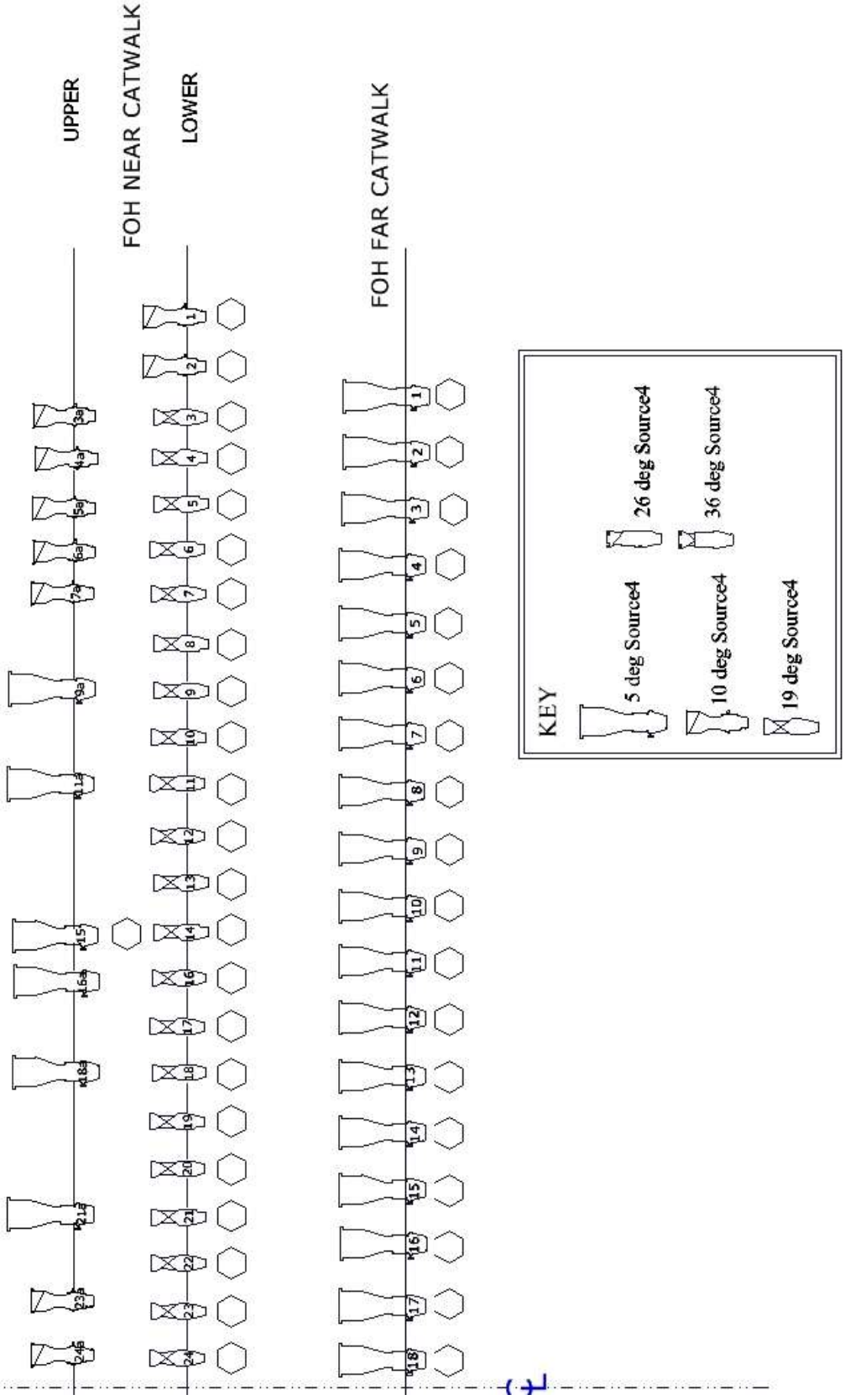
UPPER
FOH NEAR CATWALK
LOWER
FOH FAR CATWALK
KEY
5 deg Source4
26 deg Source4
10 deg Source4
36 deg Source4
19 deg Source4

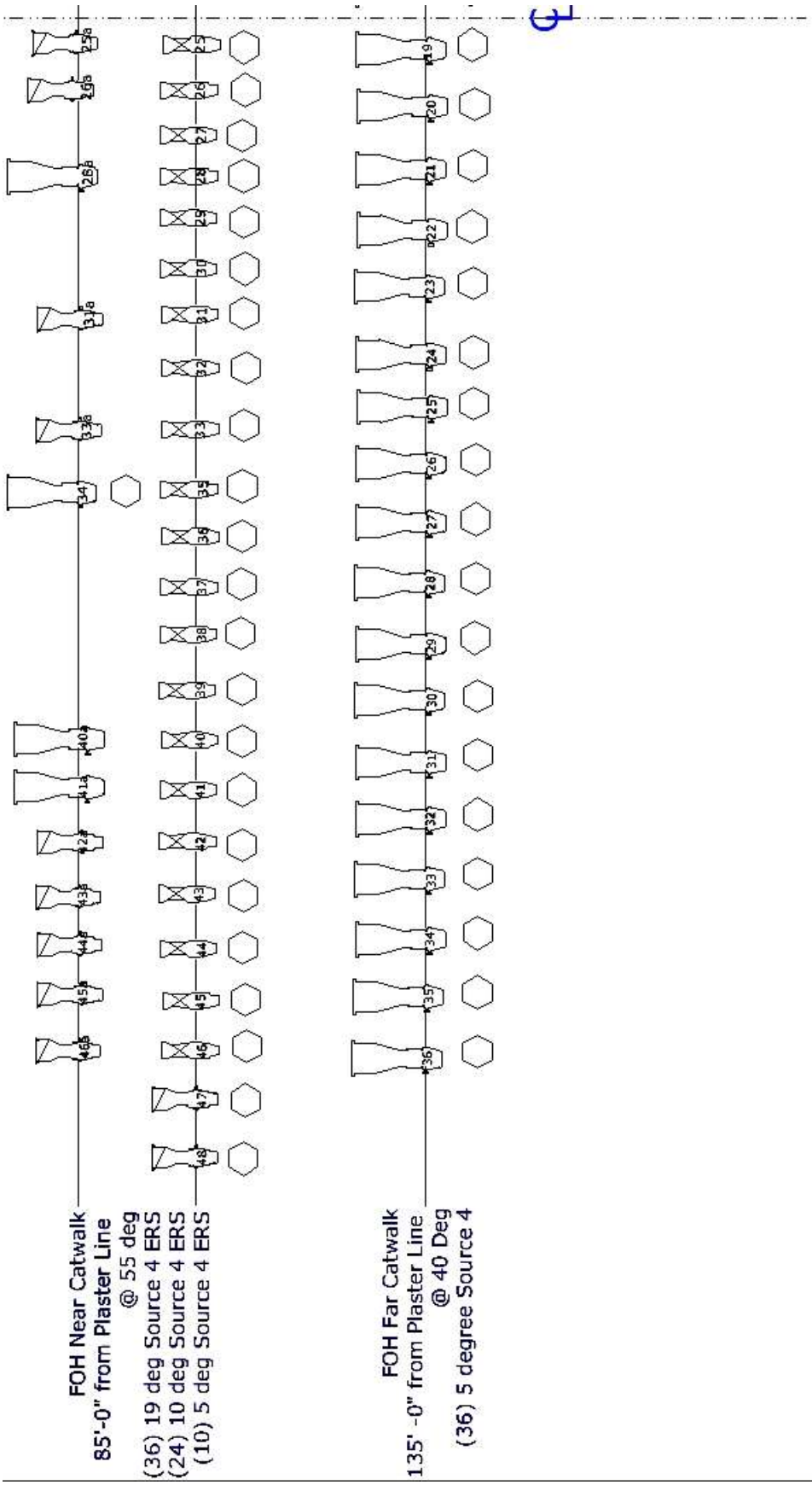
FOH Near Catwalk
85'-0" from Plaster Line
@ 55 deg
(36) 19 deg Source 4 ERS
(24) 10 deg Source 4 ERS
(10) 5 deg Source 4 ERS
FOH Far Catwalk
135' -0" from Plaster Line
@ 40 Deg
(36) 5 degree Source 4

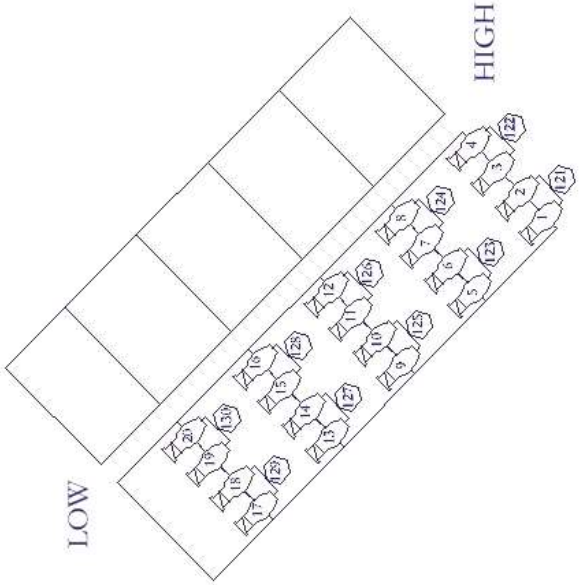

SL BOX BOOM
60'-0" from stage @ 35 deg.
(20) 19 deg Source 4

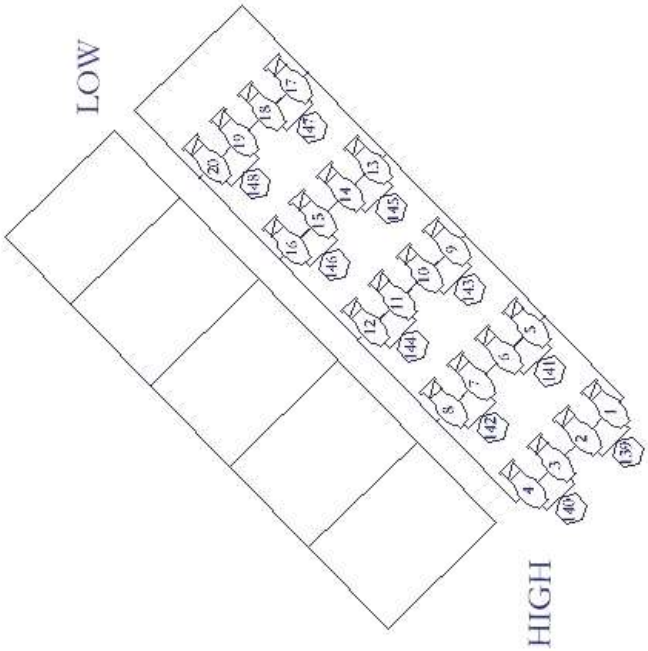

SR BOX BOOM
60'-0" from stage @ 35 deg.
(20) 19 deg Source 4

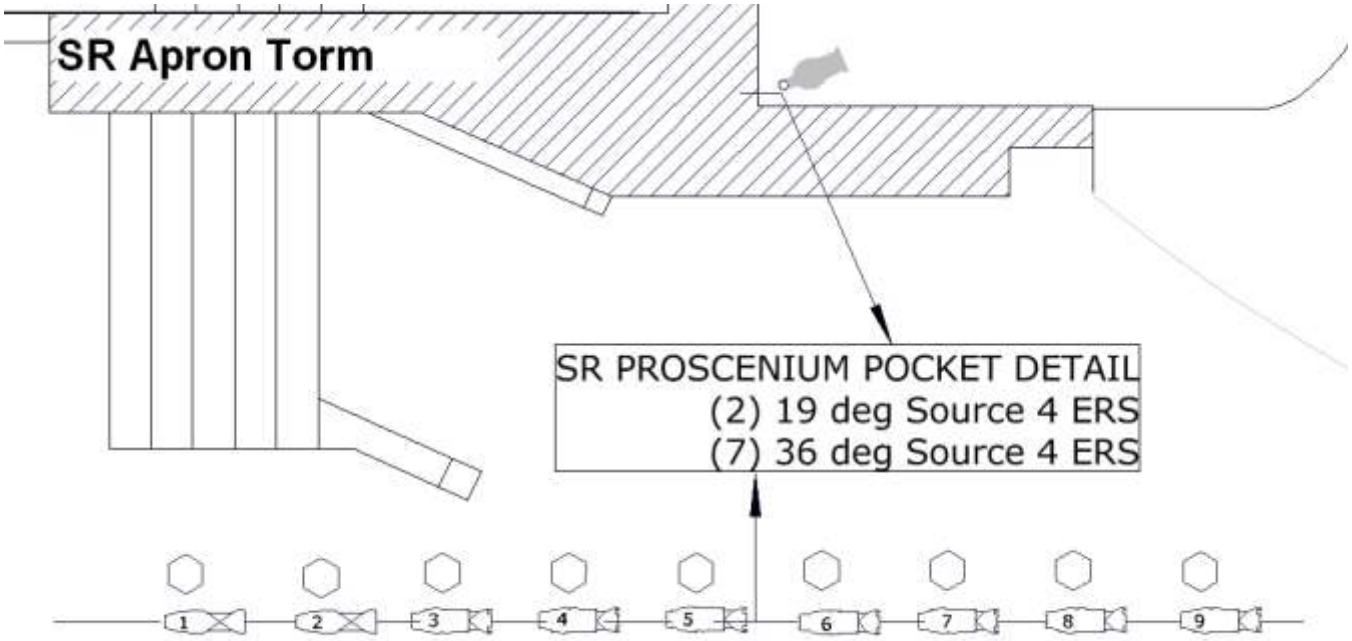
SR Apron Torm
SR PROSCENIUM POCKET DETAIL
(2) 19 deg Source 4 ERS
(7) 36 deg Source 4 ERS
1
2
3
4
5
6
7
8
9

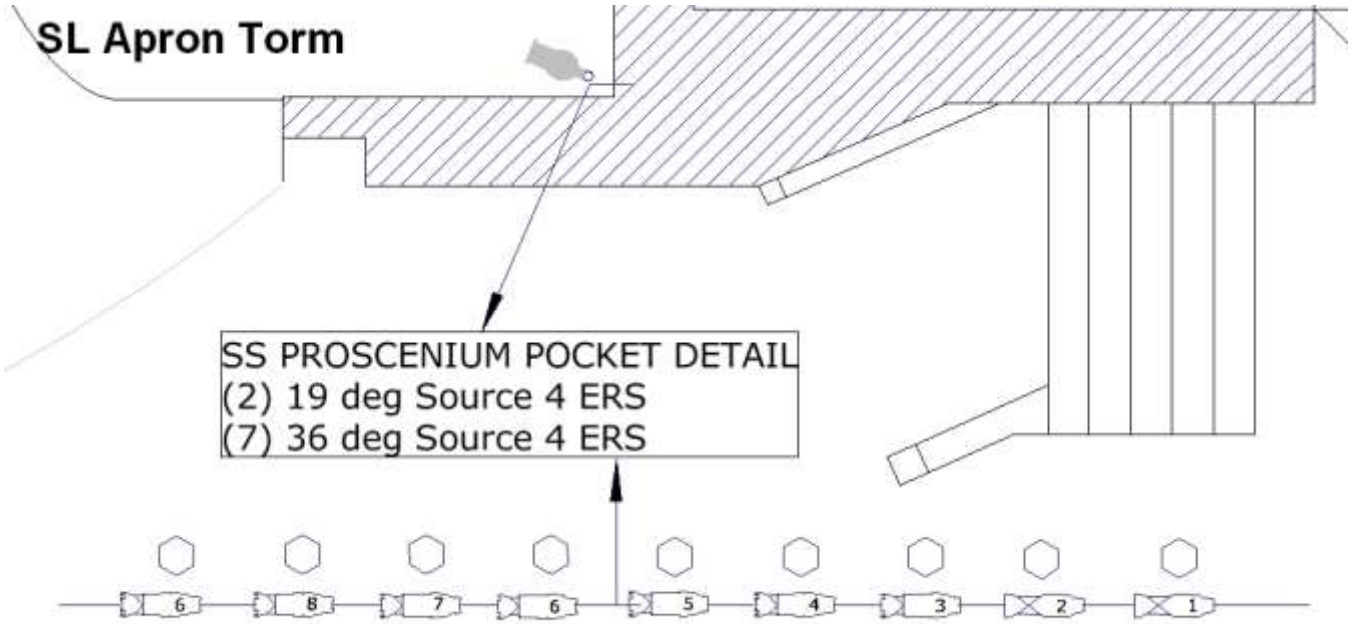
SL Apron Torm
SS PROSCENIUM POCKET DETAIL
(2) 19 deg Source 4 ERS
(7) 36 deg Source 4 ERS
6
8
7
6
5
4
3
2
1

Au-Rene Light Ladders – Elevation View: (SL units shown)

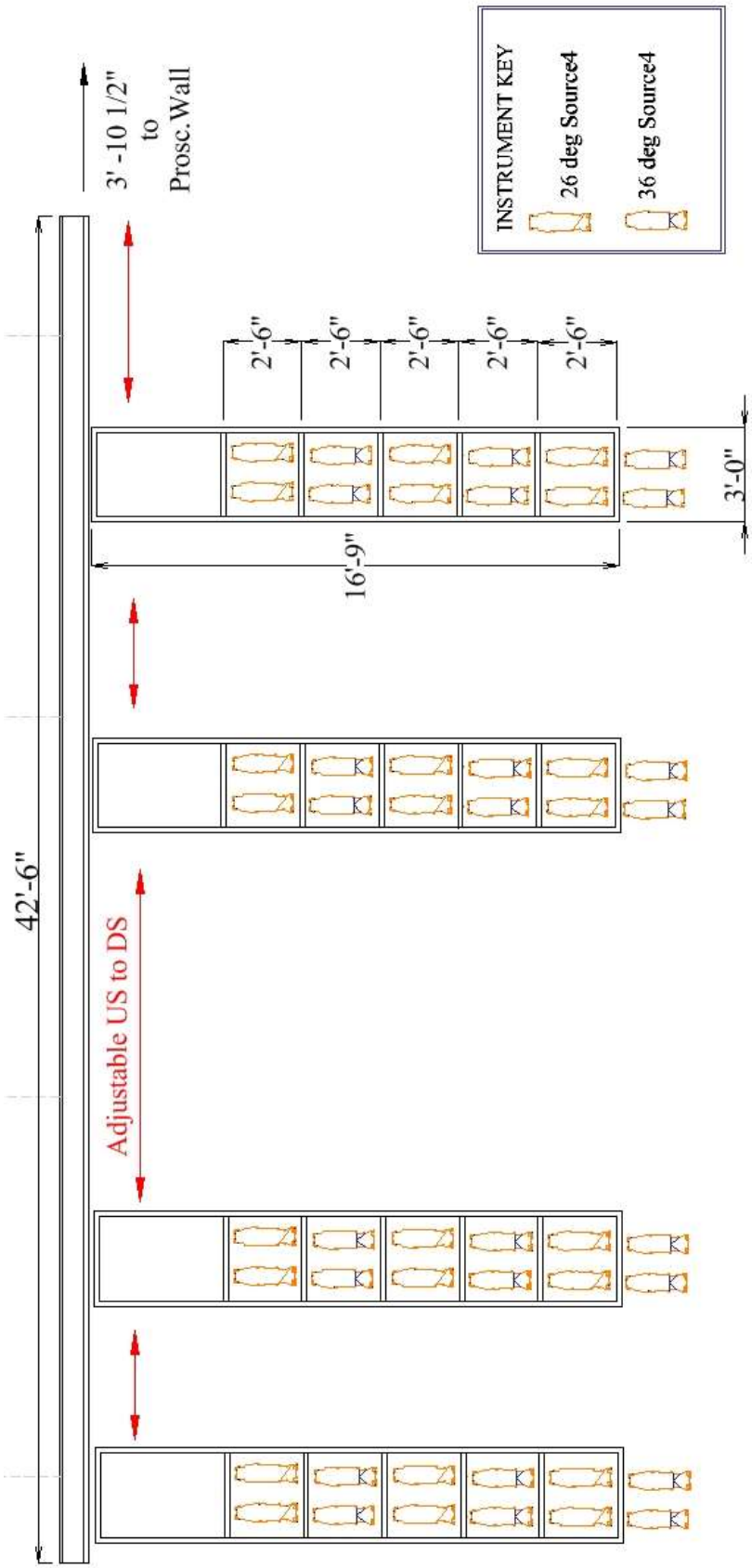

CIRCUIT LOCATIONS

CIRCUIT #	Location	Notes
1-39	Far catwalk	#7-9 are 208v/20amp
40-94	Near catwalk	#48-50, 75-77 are 208v/20amp
95-120	Mezz. Rail/Balc. Rail	#94-95 are 208v/30 amp
121-130	Box Boom SL	
	Box Seat SL	
	Box Seat SR	
140-149	Box Boom SR	
	Lower Orch Box L	
	Lower Orch Box R	
157-168	Inner Proscenium SL	
169-180	Inner Proscenium SR	
181-192	Floor DSR	
193-252	Breakout* SL	4'6" from PL, &DSL floor pocket
253-258	Breakout SL	4'6" from PL, &DSL floor pocket
259-264	Breakout SR	4'6" from PL, &DSR floor pocket
265-276	Breakout SL	8' from Plaster Line
277-282	Breakout SL	9'6" from Plaster Line
283-288	Breakout SL	10'6" from Plaster Line
289-294	Breakout SL	11'6" from Plaster Line
295-300	Breakout SL	13'6" from PL & MSL floor pocket
301-306	Breakout SR	13'6" from PL & MSR floor pocket
307-318	Breakout SL	16'6" from Plaster Line
319-324	Breakout SL	18'6" from Plaster Line
325-330	Breakout SL	19'6" from Plaster Line
331-336	Breakout SL	20'6" from Plaster Line
337-342	Breakout SL	22'6" from PL & MSL floor pocket
343-348	Breakout SR	22'6" from PL & MSR floor pocket
349-360	Breakout SL	25' from Plaster Line
361-366	Breakout SL	27'6" from Plaster Line
367-372	Breakout SL	28'6" from Plaster Line
373-378	Breakout SL	29'6" from Plaster Line
379-384	Breakout SL	31'6" from PL & MSL floor pocket
385-390	Breakout SR	31'6" from PL & MSR floor pocket
391-402	Breakout SL	34'6" from Plaster Line
403-408	Breakout SL	36'6" from Plaster Line
409-414	Breakout SL	37'6" from Plaster Line
415-420	Breakout SL	38'6" from Plaster Line
421-432	Breakout SL	39'6" from Plaster Line
433-444	Breakout SR	39'6" from Plaster Line
445-450	Breakout SL	40'6" from PL & USL floor pocket
451-456	Breakout SR	40'6" from PL & USR floor pocket
457-462	Pin Rail SL	
463-465	Pin Rail SL	463-464 are 208v/20amp, 465 is 50amp
466-471	Pin Rail USL	
472-477	Pin Rail SR	
478-480	Pin Rail SR	478-479 are 208v/20amp, 480 is 50amp
481-486	Pin Rail SR	
487-492	DSL Wall	
493-495	DSL Wall	208v/20amp

496-501	DSR Wall	
502-504	DSR Wall	208v/20amp
505-510	USL Wall	
511-513	USL Wall	511-512 are 50 amp, 513 is 208v/20amp
514-543	USR Wall	
544-546	USR Wall	544-545 are 50 amp, 546 is 208v/20amp

NON-DIMS

A,B,C located FOH
D,E,F located on Pin Rails
G,H,J,K,L,M located DS and US L&R

CUE LIGHTS

1-6 DSL, DSR, USL, USR and UPPER INDEX

BREAKOUTS

All breakouts consist of 6 stage pin connectors.

ORCHESTRA EQUIPMENT AND CONCERT SHELL

ORCHESTRA EQUIPMENT

114	Wenger Orchestra Chairs
6	Cello Chairs
100	Manhasset Music Stands w/lights
1	Conductor's Podium with Stand
10	Stools
10	3' x 6' Tables

RISERS

10	4' x 8' x 8" h
6	4' x 8' x 16" h
19	4' x 8' x 24" h
	Black skirting is available for risers

STEP UNITS

6	8" Single Step Units
2	12" Step Units
5	16" Step Units
5	24" Step Units

PIANOS

Pianos are tuned by house tuner ONLY

2	9' Steinway Concert Grand Model D
1	7' Steinway Grand Model B
4	Yamaha Uprights
3	Yamaha CP300 Keyboard with Weighted keys

ORCHESTRA CONCERT SHELL

There are four concert shell units that are forty-one feet tall, 20' -9" across, and 8'-6" deep; the two side units have double doors built in to allow entrances on both sides of the stage, just above the proscenium. Once the shell units are placed, pre-hung ceiling units are flown in to complete the shell. When completely assembled, the shell is architecturally consistent with the rest of the hall. The shell units are designed to play in one of two configurations:

Shallow Setting which is 17' deep and 39' wide at the rear, with entrance doors DL and DR.
Deep Setting which is 26' deep, and 39' wide at the rear, with entrance doors DL and DR.

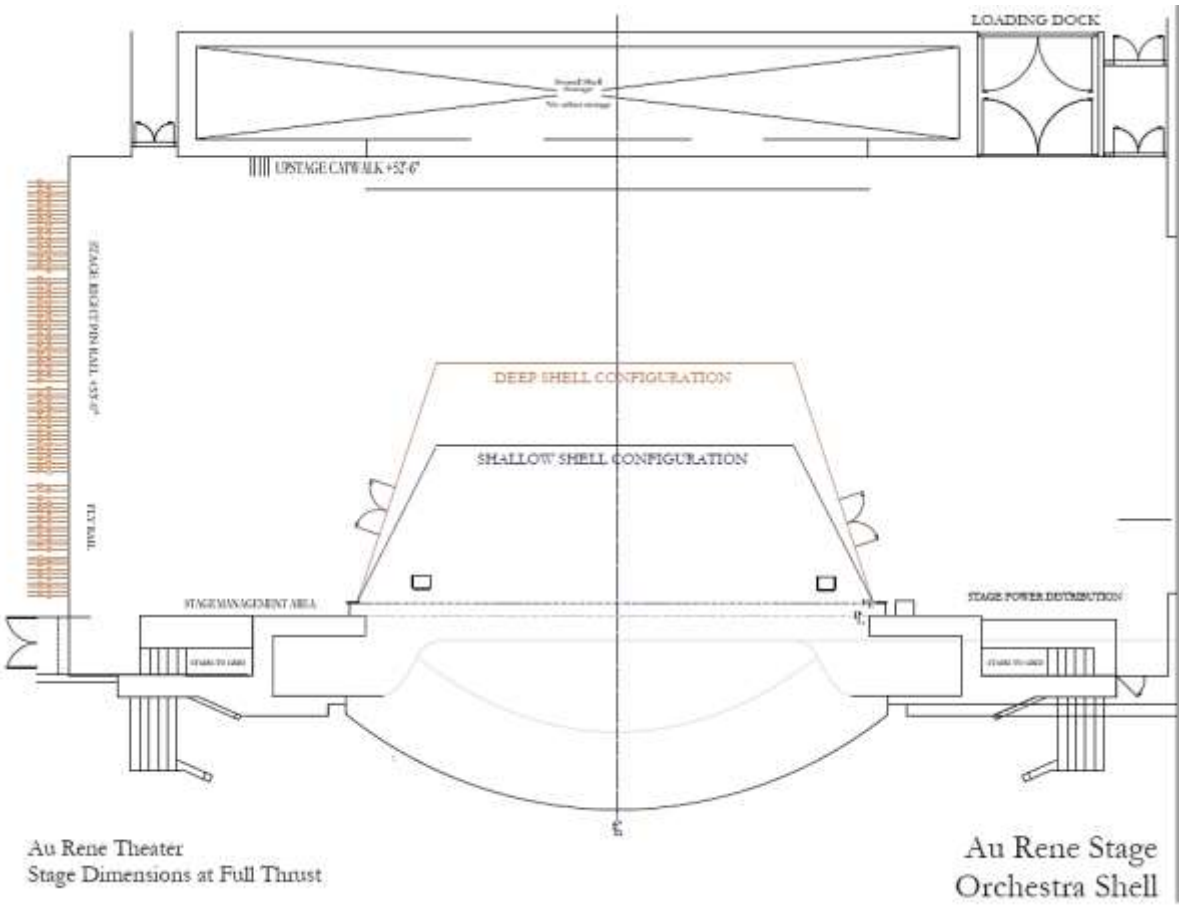

The orchestra shell in shallow configuration with full thrust stage.

AU-RENE BACKSTAGE MAP

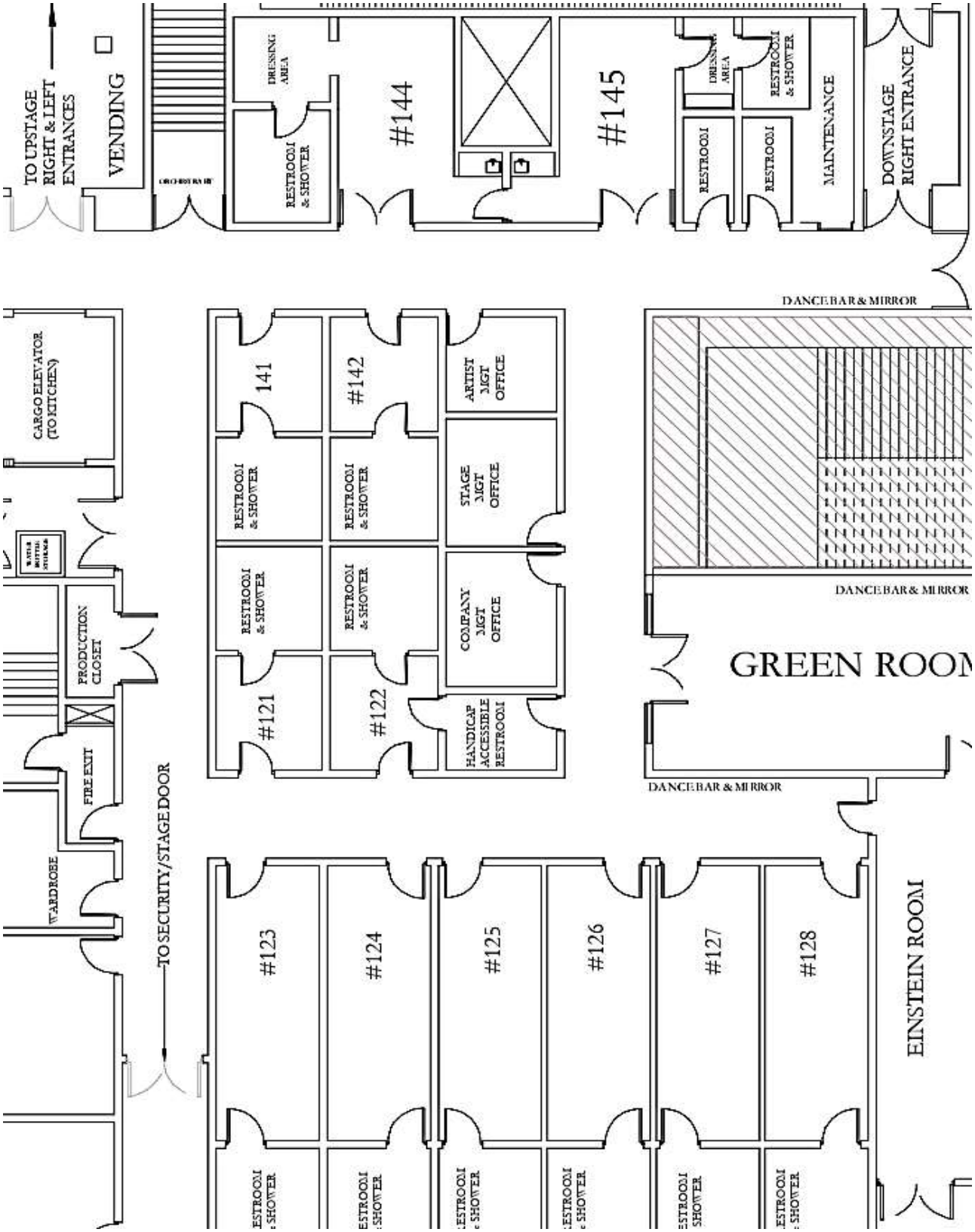

DRESSING ROOMS

All dressing rooms are located off stage right. All rooms are equipped with showers, toilets, mirrors and chairs. Rooms 144-145 are the Star/Soloist dressing rooms with a small reception area, wet bar and private bath. Rooms 121-122, and rooms 141-142 can accommodate 2-4 people, rooms 123-128 can accommodate 8-10 people. Dressing Room #122 has a door connecting directly to the ADA compliant restroom; this door is locked unless an ADA compliant dressing room is requested. See dressing map on the page 36 for location.

Dressing Room #	Suggested Capacity	Dimensions
Room #121	2 - 4 people	9' W x 10' L
Room #122	2 - 4 people (ADA available)	9' W x 10' L
Room #123	8 - 10 people	8'-6" W X 24' 8" L
Room #124	8 - 10 people	8'-6" W X 24' 8" L
Room #125	8 - 10 people	8'-6" W X 24' 8" L
Room #126	8 - 10 people	8'-6" W X 24' 8" L
Room #127	8 - 10 people	8'-6" W X 24' 8" L
Room #128	8 - 10 people	8'-6" W X 24' 8" L
Room #141	2 - 4 people	9' W x 10' L
Room #142	2 - 4 people	9' W x 10' L
Room #144 – Star DR	1 person	2 Room Suite
Room #145 – Star DR	1 person	2 Room Suite

Dressing Room #123-128

Dressing Room #121,122, 141, 142

Star Dressing Room

Star Dressing Room

PRODUCTION OFFICES

The Au-Rene theater is equipped with office space for touring acts. There are three rooms set up specifically for use as offices and the Green room the can be converted for office space if needed. These offices are located adjacent to the dressing rooms, off stage right of the theater. Each room has phone and network connections, folding tables, and chairs. Please note that there are additional fees for use of internet, phone, and long-distance calling. The default arrangement is as follows:

STAR MANAGER'S OFFICE

The Star Manager's Office is directly across from the Star Dressing rooms. It is 8'-10" by 8'-4". It has two phone connections and one data port.

STAGE MANAGER'S OFFICE

The Stage Manager's office is located between the Star Dressing Rooms and the Chorus Dressing Rooms, facing the Green Room. It is 11'-0 by 8'-10". It has three phone connections and one data port.

COMPANY MANAGER'S OFFICE

The Company Manager's Office is located between the Star Dressing Rooms and the Chorus Dressing Rooms, facing the Green Room. It is 11' by 8' 10". It has three phone connections and one data port.

TELEPHONES

The Broward Center has a total of (8) phone lines available for use in the backstage areas of the Au-Rene Theatre. There are (6) digital phone lines that require BCPA handsets, and (2) analogue lines that will work with fax machines, standard handsets, or personal voicemail systems. BCPA handsets include voicemail. Please contact the Production Department for phone arrangements and numbers.

GREENROOM

The Au-Rene Green Room is 38'-8" x 16'-10" and has a small kitchen area with a microwave, coffee maker, sink and refrigerator.

It can be used as a Catering Room, Wardrobe Room, Production Office, or a Rehearsal/Warm-Up Room.

It has one wall of mirrors and barres, a wood floor (no rosin allowed) and can be set to have five phone lines and a data port.

There are also barres and mirrors located in the hallway across from dressing rooms 127 and 128, and in the hallway across from the stage entrance to Down Stage Right.

WARDROBE & SUPPORT SPACES

WARDROBE ROOM

There is no dedicated Wardrobe Room at the Broward Center, just a small room for minor repairs. The Show's Wardrobe Department has the option of setting up in a dressing room or the Au-Rene Green room. The "wardrobe room" really works as a laundry area so most shows opt to use Dressing Room 123 as a wardrobe workroom, if one is required. Arrangements should be discussed with Production Staff prior to the company's arrival.

LAUNDRY ROOM

The Broward Center has one Laundry Room which is located in the back of the Wardrobe Room. There are three washers and three dryers as well as a double sink.

CARPENTRY SHOP

The Broward Center has a small woodshop equipped for general repairs as well as limited equipment for metal and steel. It is located in the Au-Rene backstage, so usage is dependent on activity in the Au-Rene.

ADDITIONAL RENTAL SPACES

The following space must be reserved in advance and is subject to availability: The Einstein Room is 36' x 18' and is located next to Au-Rene Green Room. It has no mirrors or bars. Please contact the Event Services Director for arrangements.